Instructions for
SAITO FA-100Ti (AAC) 4-Stroke Engines

We would like to express our sincere thanks for your purchase of the SAITO FA-100Ti engine, which is manufactured by Saito Seisakusho, Ltd. Please read our instructions carefully and treat your engine with care. Should there be a manufacturing defect, Saito Seisakusho, Ltd. will make necessary repairs at free of charge. You will notice a letter (A, A, C etc.) stamped on the top of the right mounting lug. This identifies the production version of your engine. If you ever need to order a part or have a question about your engine, kindly contact the agent distributor and specify this letter along with the part number you need so we can better handle your request.

Method to order parts (example)

Engine: FA-100Ti
Manufacturing code: A (Stamp on engine front left beam mount)
Part: Cylinder
Part No.: 01
Quantity: 1 piece

Your Saito FA-100Ti engine is a world-first air-cooled straight-2-cylinder 4-stroke engine. To overcome the over-heating of rear cylinder, which is a drawback of straight air-cooled engine, design concept of actual star-like-multiple-cylinder engine of actual airplane has been introduced and two cylinders are placed in narrow-angled V-form with slight phase difference.
As this engine is designed on the assumption that it is installed in a fighter with liquid-cooled engine, etc., standard installation is inverted position.

Note: As such, body of airplane shall be built to have smooth airflow around the engine. Air inlet shall be provided in front of the cowling and proper spaces shall be provided at immediately before fireproof bulkhead both left and right, and under the engine so that the air goes through such spaces.

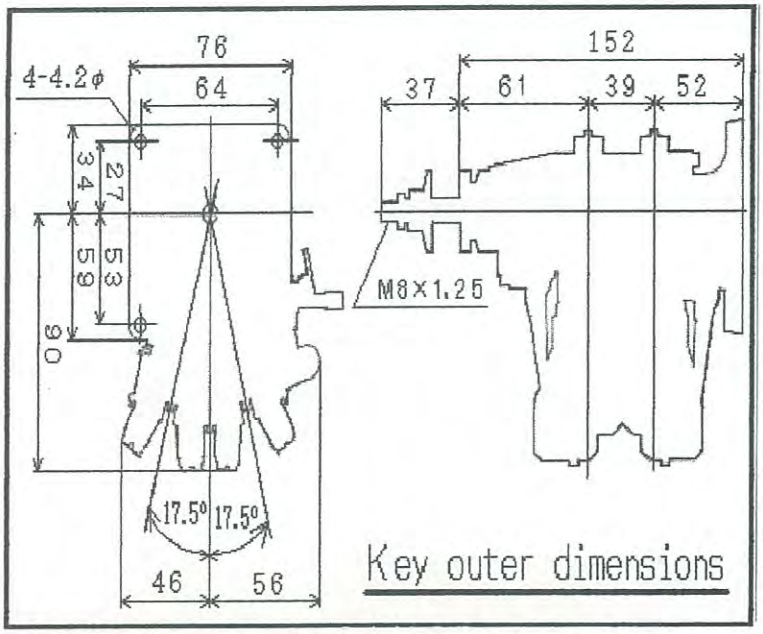

Explanation of 4-Stroke Cycle Engine

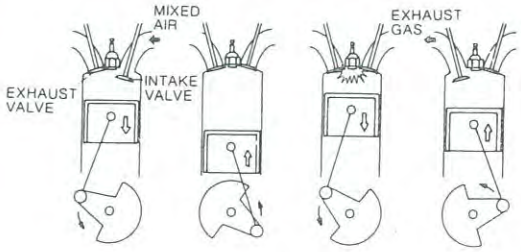

1. Intake stroke 2. Compression stroke
3. Expansion stroke 4. Exhaust stroke

The four-stroke engine consists of four individual piston movements as illustrated above. "Stroke" means that the piston is moved from the upper dead center to the lower dead center point. In the four-stroke engine, one cycle is completed every two revolutions of the crankshaft.

Unique features of SAITO FA-100Ti engines include:

- Cylinder: ..... Thanks to the monolithic structure of cylinder head and cylinder with direct hard chrome plated inner surface without using cylinder liner, this engine emphasizes durability while it also offers lightweight and distortion-free structure with improved cooling efficiency.
- Piston: .....High silicon content aluminum is used in the piston construction. It also has a compression ring that increases the engine's efficiency.
- Crankshaft: .....Made of solid chrome molybdenum steel, and supported by four ball bearings.
- Cam gear:.....Our front mounted cam gear design results in a compact engine.
- Cam:.....Features high-output type high cam
- Combustion chamber.....Increased combustion efficiency with improved hemispherical shape
- Propeller nut:.....Double nut design to prevent fall-off for safety
- Exhaust sound: .....Real-plane-like exciting exhaust sound
- Dual plug: .....Improved stability in idling
- Carburetor:.....High-performance type with slow adjustment equipped with choke valve
- Remote needle:.....Position of needle valve is not limited. (As the package space is limited for shipping, needle valve is not attached to the mount. Please attach it to the mount before use. It can be attached either to left or right when viewed from front end, but standard position is at left in erect position viewed from front end.)

FA-100Ti Technical Data

Bore	24.8mm dia. X 2	Stroke	18.6mm X 2
Stroke volume	17.97cc	Weight	Approx. 1,100g, engine only
Practical speed	Approx. 2,000~10,000rpm (Recommended highest speed on the ground: 8,000~9,500rpm)		
Propeller (Standard)	14" X6" ~14" X8" 15" X5" ~15" X6"	Fuel flow	Approx. 30cc/minute (at full throttle, approx. 9,100rpm) Fuel flow varies depends upon propeller load. More fuel flow with larger load and less fuel flow with smaller load. (In actual flight, fuel flow somewhat increases.)
Fuel	Synthetic oil with 10~20% nitromethane content		
Static thrust	Approx. 2.5~2.6kg at 9,100rpm with APC14" X6"		
Application	RC Scale Airplane, Sports Airplane, etc. of 2 stroke 10cc class		
Accessories	Spanner for tappet adjusting screw.....1 each Tappet adjusting screw gap gauge (0.1t).....1 each Hexagonal spanner (wrench) (1.5, 2.0, 2.5 & 3.0)..1 each Screwdriver (-) for idling needle adjustment.....1 each ..... Plug wrench .....1 each A set of remote needle valve.....1 each Remote needle valve extension bar .....1 each Plug SAIP-400 (attached to the engine) .....2 each		Muffler set.....1 set * For front cylinder.....1 each * For rear cylinder with nipple.....1 each *Muffler right angle adopter (attached to the engine)....2 each Plug and cord set .....1 set * Red cord .....2 each * Black cord .....1 each * Metal fitting .....2 each Engine mounting screws .....1 set * Cap screw M4 x 25 .....4 each * Shake proof washer .....4 each * Claw nut 4

A. Fuel

It is very important for engine to use high quality fuel containing 10~20% nitro. For consistent performance and long engine life, use fuel containing **AT LEAST 20%** lubricant by volume. **(DO NOT USE LOW OIL FUEL)** Since the 4-cycle engine has high exhaust temperature and carbon is apt to accumulate when caster oil type lubricants are used. The fuel filter is to be installed and SAITO F-1 is designed for this model engines. **SAITO fuel filter "F-1" exhibits highest performance.**

B. Fuel tank

Please select best fuel tank available in the market with approximate capacity of 500~600cc. Set the level of fuel in the tank to the height that is roughly the same with that of inlet nipple of carburetor. Also, put a weight to the fuel inlet at a distance of approximately 3~5mm from the rear wall of the tank.

※ Check for the crack in the aluminum pipe and silicon tube in the tank. Since Saito engine employs muffler pressure, careful attention is required for the leakage. Also, be careful not to make length of piping silicon tube unnecessarily long. (Watch for possible crack.)

C. Plug

Since one explosion occurs in every two rotations in 4 stroke engine, selection of the plug is critical. Use of improper plug results in a trouble of engine. Since performance of the engine varies according to the matching with the fuel or to the season, we recommend testing various types for the best performance.
(Some plug type of the other manufacturer exhibits good match with Saito engine. Also, performance of the plug deteriorates after many flight hours even if it is not broken, frequent exchange of the plug with new one would be necessary.)

Use of SAITO "SAI GP01" (SS) Glow Plug is recommended.

D. Propeller

It varies according to the body of airplane, however, standard size ranges from 14" X6" ~14" X8" and 15" X5" ~15" X6". Since these figures are merely provided as a guide, any propeller with other size can be used without problem as long as it matches with the engine
Please select the one available in the market with high reliability. (We recommend APC.)
Thorough balancing must be carried out. (Use balancing device is recommended.) Use of unbalance propeller creates excessive vibration, reduces performance and is dangerous. If you find flaw etc., replace it with new one, as it is dangerous.

Avoid operating the engine beyond 10,000rpm with light load propeller on the ground and below 7,500 rpm with large load propeller otherwise crankshaft, bearings, connecting rods, cam gears, etc. may be damaged.

Use propeller that matches to the airplane and turns in good condition in the range of 8,000~9,500rpm on the ground in view of the characteristics of this engine. (If propeller size is not in the standard, it is OK as long as the speed is within this range.) Speed varies depending upon the manufacturer and also, in some instances, it occurs with the propellers in the same size those manufactured by the same manufacturer. We recommend testing various propellers.

E. Engine Mounting

Though inverted mounting position is standard, you can mount your engine in any direction required.
Cautions for inverted mounting:

* 1: When the engine is mounted in inverted position, cylinder head or so on may be damaged upon landing.
  2: When the engine is not run for sometime, remove the glow plug and turn the prop several times to remove any excess fuel. (If the engine is started without following this procedure after each flying session, your engine may be damaged.)
  3: Since straight two-cylinder engines more or less produce vibration, fireproof bulkhead to which radial mount will be fixed shall be strongly built.

F. Preparation before Starting Engine

①Engine must be mounted to the sturdy test bench with correct parallelism or to the body of airplane. (Engine must be firmly fixed in either case so that it does not move.)

②For the break-in on the bench, use fuel tank with a capacity of approximately 500cc. For airplane body, use the one already installed.

③For the fuel, use the one with approximately 15% nitro-content except low oil content.

④For the propeller, prepare APC 14" X6" propeller (around 9,000~9,300rpm at standard).

※To fix propeller, turn drive flange in forward direction (counterclockwise) and when pressure is felt, place propeller in horizontal position and fully tighten propeller nut and lock nut to fix. When a spinner is attached, it must be securely fixed following a procedure for double nut tightening.

Caution: Additional tightening of the propeller must be made after every 10 flights. In particular, if you are using wooden propeller, it would be compressed so that the nut can be easily loosened. Therefore, careful and thorough additional tightening is required.

⑤ Since 4-stroke engine does not clearly exhibit peak condition like 2-stroke engine, use tachometer to prevent over-squeeze or overheating.

⑥ Attach silicon tube to the breather nipple to check the exhaust of breather.

⑦ Muffler pressure must be used without fail. (Make sure that no leakage is occurring from the tank.)

⑧ Prepare necessary materials and tools for plug heat. (Prepare a battery for plug heat with a capacity as large as possible.)

⑨ Prepare the starter and battery.

Caution: If any spectator is watching nearby, please ask the one to move backward prior to start the engine. Also, the arm that holds airplane must be kept away from the prop. When the engine is started, move to the back of airplane. Any operation like needle adjustment must be carried out from the back of airplane. If airplane is not fixed, it is safe to ask your assistant to hold the airplane.

G. Engine Starting Method

(This procedure assumes that engine break-in procedure has already been completed and the engine is already mounted to the airframe.)

For your own safety, engine starter must be used to start your engine.

① First turn on the switch of transmitter. Next, turn on the switch of receiver unit to check throttle action and then, set throttle stick at the position fully closed.

② Open main needle (remote needle in case of FA-100Ti and remote needle is used hereafter in lieu of main needle) by 3 turns. (This is just a guide.)

③ Fully open throttle valve with throttle stick.

④ Cover the outlet of exhaust pipe with pressure nipple with your hand and turn propeller a few times vigorously in counterclockwise direction to choke the engine.

Caution: Excessive fuel intake compresses fuel and may damage connecting rods etc. Crank 1 to 2 turns with hand and check if no fuel compression has occurred. Engine could be easily started with less choke.

⑤ After throttle valve is fully closed once with throttle stick, open throttle valve 1/4 to 1/3 with throttle stick. (Start with excessively opened throttle is dangerous as the airplane jumps forward.)

⑥ Turn propeller in reverse direction (clockwise) to feel compression.

⑦ Power the plug.

⑧ Engine will start easily when starter is turned for about 5 seconds.

Caution: Do not start the engine with starter at the position where engine is compressed in forward direction, as it is dangerous.

H. Engine Break-In

As the break-in is an important procedure to pull out maximum performance of the engine, it must be cautiously implemented.

①After fuel tank is filled up, start the engine after remote needle is opened 5 turns or more as described in the above.

②After opening of throttle valve is set approximately 1/2 or less (just as a guide) with throttle stick, adjust engine speed to stabilized condition at approximately 5,000rpm or less in rich condition while carefully watching tachometer, exhaust oil density, discharge density from the breather and exhaust noise. Run the engine in this condition for full tank fuel consumption. (Plug heated condition may also be employed if the case allows.)

Caution: Absolutely, never make fuel mixture to lean condition in this stage. Even if you drop the speed to the idling speed and run the engine at low speed, seizure would occur if the mixture is lean. Object of this break-in is initial familiarization of connecting rods, gears, moving parts and so on in the condition mainly with rich fuel mixture.

③Next, set throttle valve at three-quarter opening and run the engine for half tank. (In this stage, exhaust oil density and discharge density from the breather must also be checked.)

④Then, run the engine with throttle valve fully opened for half tank.

⑤Finally, run the engine at peak speed and less speed alternatively and if the engine runs at peak speed without unevenness, ground break-in has completed for the time being. Then, after tappet clearance is adjusted according to the procedure described in item ③ of Article J and carburetor is also adjusted according to the following article, and after around 10 flights at less speed, break-in will be completed for the present. (Also, set it at slightly less within the range of output required for the flight, thereafter.)

Caution for the flight: For early flights, fly airplane in the windward and keep high altitude and distance so that the airplane is able to return to the airfield even if the engine has stopped. If you fly airplane at low altitude from the beginning, body of airplane may be damaged at emergency landing due to engine trouble.

I. Handling and Adjustment of Carburetor

Basic steps for the adjustment of carburetor are first carefully obtaining peak (maximum) speed by adjusting remote needle valve after break-in procedure on the ground has been completed and then, set idling speed (slow speed) using throttle valve and slow needle. (Vice versa is not possible, however.)

①After fuel tank is filled up, start engine as described in Article G. After throttle valve opening is set at full open with throttle stick, cautiously obtain peak speed with remote needle valve while watching tachometer and listening to the exhaust noise.

Caution: Excessive closing of remote needle is very dangerous, as it causes knocking and loosens propeller nut. In such occasion, immediately turn the remote needle in counterclockwise direction to loosen.

②Next, slowly close throttle valve and cautiously adjust the speed using a screwdriver for slow needle and throttle stick for throttle valve opening so that the engine runs at an idling speed in the range of around **1,900～2,200rpm** in stable condition. (See the figure below)

③Once idling speed is set, slowly open the throttle valve to full open. If the speed becomes irregular or suddenly increases in this process, carefully make fine adjustment with slow needle so that the speed changes linearly from the idling to the peak speed.

④When the above adjustment has completed, quickly change the speed from idling to its peak. If the speed does not reach at its peak simultaneously with the condition of throttle valve fully opened, return remote needle by single knurl notch. Then, quickly change the speed from idling to its peak, again. Repeat this procedure cautiously until you can obtain good response.

⑤When all conditions are set, decrease speed by about 200～300 rpm with remote needle valve.

※When peak speed with full tank fuel is at 9,000 rpm, reduce speed by 300 rpm to set it at 8,700 rpm. It is the key for longer service life to run the engine at a speed slower than its peak by around 300 rpm and the bearings would hardly get rust by doing so. Also, by setting peak speed at slightly slower, optimum mixture condition can be obtained in the upper air for the flight.

※Use standard values shown in the following figure as the standard for carburetor needle opening adjustment, though slight adjustment is required according to the engine mounting position, propeller type, fuel type, plug, weather condition, and so forth.

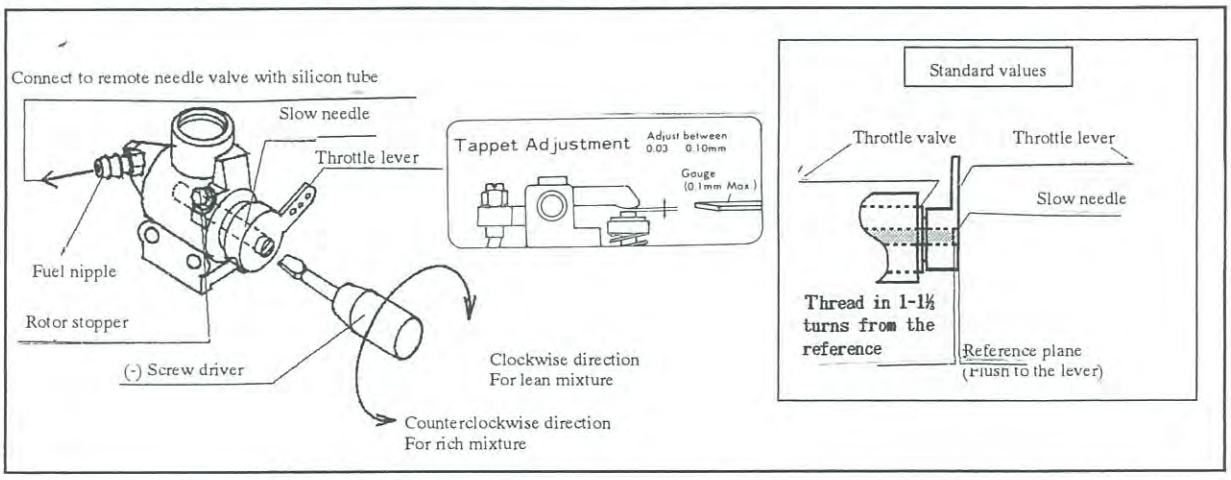

J. Normal Operation, Maintenance and Supplements

①To prevent wear and seizure of rotating section and sliding surface of the engine, necessary areas are lubricated with black molybdenum oil. When the engine is in operation, black waste oil is produced from breather nipple, muffler, etc., however, you can continue your operation, as it is normal. It occurs in break-in stage.

②Do not set remote needle too lean, as it will cause overheated engine. Adjust it slightly slower than the peak. (Too lean operation causes knocking, stoppage and negative influence on the connecting rods and cam gear.)

③Tappet gap adjustment

Tappet gap (valve clearance) shall be adjusted at the stage where ground break-in procedure has been completed. Because of initial wear, clearance has increased.)

Adjustment of tappet gap must be carried out while the engine is cold.

For the adjustment of tappet gap, remove plug and rocker arm cover and when the propeller is slowly turned in forward direction with hand, rocker arm stops. If you turn the propeller further, piston reaches at its top dead center of compression. Then, make adjustment using attached spanner and hexagonal wrench so that it comes indefinitely close to zero while the compression exists at the position. When the gap is checked, securely fasten (but not excessively) the locking nut.

※In case of actual automobile engine, small gap is provided by anticipating valve elongation. However, in the case of our engine, gap becomes larger during operation as elongation of cylinder (aluminum) is larger than that of the valve, therefore, the gap must be set indefinitely close to zero while the engine is cold.

After this adjustment, tappet gap must be checked from time to time with the above procedure. If attached gauge (limit gauge t=0.1mm) can be inserted, gap becomes too large and adjustment must be made. Tappet gap is the most important factor in the maintenance of 4-stroke engine. If the engine is operated with excessive gap, it would result in poor performance.

④After about 10 flights, additional tightening shall be implemented on the sections with gaskets such as cam gear house and so on to prevent loosening.

⑤When exhaust pipe is fixed to the cylinder and propeller nut is fixed, apply small quantity of silicon rubber (not excessively) on the thread section and screw it in. It prevents leakage and loosening.

⑥Additional tightening of propeller nut and exhaust nut (while it is hot) must be carried out from time to time.

⑦After the flight, lubricate entire engine with spray type preserve lubricant through the carburetor or breather.

⑧If the engine is not operated for any longer period of time, remove the plug, head cover, under cover, and so on from the engine and clean them thoroughly with alcohol. After lubrication, reassemble them to the original condition and put a plastic cover on it.

⑨If the engine is stopped with much mixture, bearings in the crankcase may get rust. Run your engine for about 10 seconds at maximum speed before it is stopped and cut off the fuel to stop.

⑩Piston, bearings, cam gear, and so on are lubricated by the oil that comes into crankcase through the gap between cylinder and piston.

⑪To discharge waste oil, connect silicon pipe and so on to the breather nipple of front cam gear housing to discharge it outside of the airplane.

⑫Safety is the most important element when operating model engines. Be careful not to cause trouble to others.

⑬Engine for model airplane is not a toy. Handle it with extreme care.

K. Hints for Disassembly/Assembly Work

Since the engine can not be disassembled or reassembled unless special tools are employed, never try to disassemble the engine.
Failure of the engine due to unnecessary disassembling and so forth will not be covered by the warranty.
Whenever repair work is required for the engine, send the engine to our service department.

All specifications and models are subject to change without notice.

SAITO SEISAKUSHO, CO. , LTD.

22-7, 3-chome, Tokagi, Ichikawa, Chiba 272-0024, Japan

Phone 047-378-4156

Fax 047-378-4155

SAITO FA-100Ti Parts List
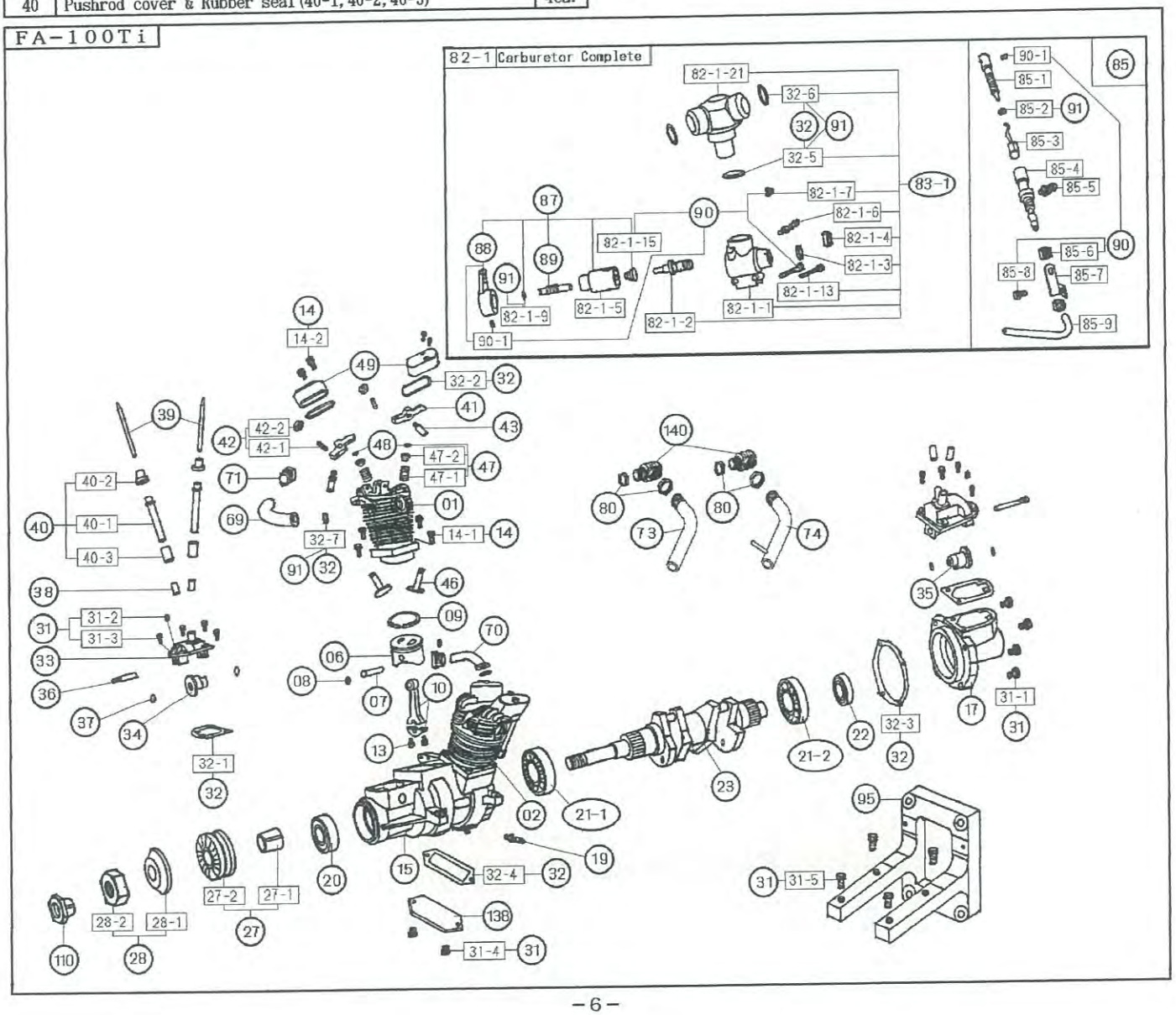
NO	Description	Q'ty	NO	Description	Q'ty
01	Cylinder (front)	1	41	Rocker arm	4
02	Cylinder (rear)	1	42	Rocker arm screw & Nut (42-1, 42-2)	4ea.
06	Piston	2	43	Rocker arm pin	4
07	Piston pin	2	46	Valve set (In & Ex)	2set
08	Piston pin retainar	4	47	Valve spring & Keeper & Retainer (47-1, 47-2, 48)	4ea.
09	Piston ring	2	48	Valve retainer (Cotter)	4
10	Connecting rod	2	49A	Rocker arm cover	4
13	Conrod screw	4	69	Intake manifold (Intake pipe) (front)	1
14	Cylinder screw set (14-1, 14-2)	2set	70	Intake manifold (Intake pipe) (rear)	1
15	Crankcase	1	71	Intake manifold nut	2
17	Rear cover	1	73	Muffler (front)	1
19	Breather nipple	1	74	Muffler (with nipple) (rear)	1
20A	Front bearing (#R6LLU)	1	80A	Muffler nut	4
21-1	Main bearing (front) (#6902ZZC3)	1	82-1	Carburetor complete	1set
21-2	Main bearing (rear) (#6902ZZC3)	1	83-1	Carburetor body assembly 82-1-1, 82-1-2, 82-1-3, 82-1-4	1set
22	Rear bearing (#697LLU)	1		82-1-6, 82-1-7, 82-1-13, 82-1-21, 32-5, 32-6	
23	Crankshaft	1	85	Full throttle needle (Remote needle valve assembly)	1set
27	Taper collet & Drive flange (27-1, 27-2)	1ea.		85-1, 85-2, 85-3, 85-4, 85-5, 85-6, 85-7, 85-8, 85-9, 90-1	
28	Prop washer & Nut (28-1, 28-2)	1ea.	87	Throttle barrel assembly (82-1-5, 82-1-9, 82-1-15, 88B, 89)	1set
31	Crankcase screw set (31-1, 31-2, 31-3, 31-4, 31-5)	1set	88B	Throttle lever (88B, 90-1)	1
32	Engine gasket set (32-1, 32-2, 32-3, 32-4, 32-5, 32-6, 32-7)	1set	89	Idle needle	1
33	Cam gear housing/Set screw M3X4	2	90	Carburetor screw & spring set	1set
34	Cam gear (front)	1		82-1-7, 82-1-13, 82-1-15, 85-6, 85-8, 90-1	
35	Cam gear (rear)	1	91	Carburetor gasket set (32-5, 32-6, 32-7, 82-1-9, 85-2)	1set
36A	Cam gear shaft	2	95	Engine mount	1
37	Steel washer set	2set	110	Anti loosening nut	1
38	Tappet	4	138	Crankcase cover	2
39	Pushrod	4	140	Muffler right angle adopter	2
40	Pushrod cover & Rubber seal (40-1, 40-2, 40-3)	4ea.