Instructions for FA-182TD AAC 4 Stroke Cycle Engine

Thank you for your purchase of the SaitoFA-182TDengine. We feel that you have made a wise purchase and one that will last for an extended period of time through hard usage. Please read and become familiar with these instructions prior to operation of the engine. Follow closely the break-in procedures and maintenance instructions while we will repair this engine without any cost, if you have a manufacturing defect.

The FA-182TD engine utilizes a single throw crank shaft, like all full sized radial engines. Because of this design, the engine is simple in construction, light in weight, and highly efficient.
The dual-plug system offers excellent performance for idling. The front-rear plug arrangement further improves combustion characteristics.

Cylinder	: Hard chrome plated for better cool running and light weight
Piston	: High silicon content aluminum
Crankshaft	: Twin ball bearing supported
Cylinder Head	: Hemispherical for increased power
Cam Gear	: Forward placed twin cams for light weight
Valves	: Large diameter for power and efficiency
Carburetor	: Twin carburetor
Dual-plug system	

FA-182TD(29.98cc) Specifications

Bore	28.2 mm x 2
Stroke	24.0 mm x 2
Practical Rev.	2,000~10,000 rpm
Fuel flow	Full throttle/1 minute.Approx.60cc fuel. 10~20% Nitro
Weight	1040 grams approx.

ACCESSORIES FOR FA-182TD

1. Spanner for tappet adjusting screw	1
2. Screwdriver for slowneedle adjustment	1
3. Tappet adjusting screw gap gauge (0.1t)	1
4. Hexagonal spanner (wrench) (3.2.5.2.1.5)	1 each
7. Engine mount bolts M4×25 & washer M4	4 each
8. Blind nuts for mounting bolts (M4)	4
9. Needle valve extension bar	2
10. Knob for bar	2
11. Connector for plug	1 set
12. Exhaust pipe (R & L) w/gasket	1 set
13. Glow plug fitted in the engine	4

Explanation of AAC4 Stroke Cycle Engine

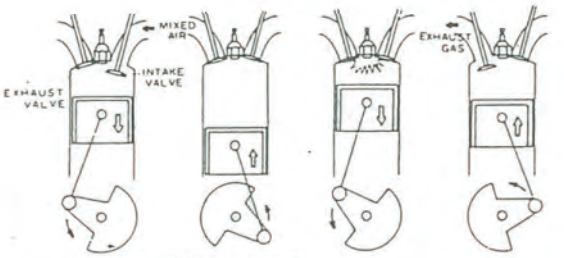

1 Suction Stroke 2 Compression Stroke
3 Expansion Stroke 4 Exhaust Stroke

4 Stroke Cycle engine consists of 4 strokes as illustrated above. Stroke means that piston is moved from the upper dead point to the lower dead point. In case of 4 Stroke Cycle engine, gas condition in cylinder, variation, valve motion, etc., are 4 strokes 2 both ways of piston. After all, 1 cycle is finished every 2 revolutions of crankshaft and returns to the original condition.

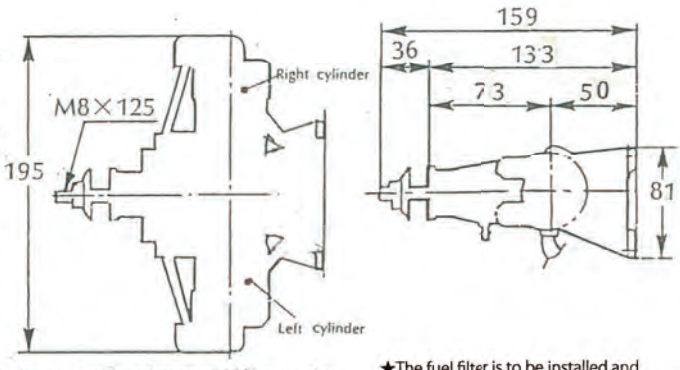

Ⓐ Fuel :
It is very important for engine to use high quality fuel containing 10~20% nitro. For consistent performance and long engine life, use fuel containing **AT LEAST 20%** lubricant by volume. **(DO NOT USE LOW OIL FUEL)** Since the 4-cycle engine has high exhaust temperature and carbon is apt to accumulate when caster oil type lubricants are used.

Ⓑ Plugs :

Use of SAITO "SAI GP01" (SS) Glow Plug is recommended.

Ⓒ Propeller : Standard for this engine is the 15"×8" —— 16"x8"

Ⓓ Engine Mounting : Use at least 10mm or greater thickness of plywood for mounting the radial engine mount as a fireproof wall and strengthen with triangle wood stock. Use attached parts for fixing. (See diagram)

Ⓔ Fuel Tank : Use a 600 ~ 700cc fuel tank. It is the best that fuel in the fuel tank has the same level as the needle valve.

TWIN CARBURETOR
(1) An optimum fuel-air mixture for efficient combustion to the right and left cylinders can be individually adjusted by the needle valve.
(2) Improved output
(3) Improved performance without plug heat in idle mode.

★The fuel filter is to be installed and SAITO F-1 is designed for this model engines. **SAITO fuel filter "F-1" exhibits highest performance.**

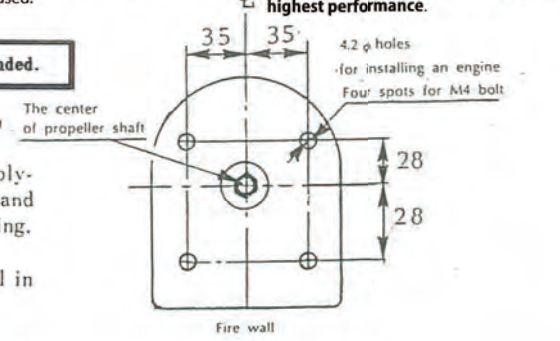

How to install an engine

Power source parts right and left, and alarge dry battery in capacity (1.5 V FM-(3 H)) or Nickel-Cadmium batteris UM1 is used for each of them.
Moreover, use an electric wire (0.5 VSF low resistance wire) or bigger ones. Unless you use it, electric current is short and a battery is wasted for start troubles. Make sure to start the both cylinders together while one side start is strictly prohibited.

Ⓕ Engine Start Use always muffler pressure. For your safety, use a pair of gloves for starting

a) Manual Start

- Rotate the propeller clockwise and set it in a vertical position by tightening nuts when it gets compressed.
- Fully open the throttle valve.
- Open main needle about 2.5, 3, turns.
- Priming
  Pull out a stopper, and prime fuel about 5 cc with a syringe. Be sure to put the stopper on.
- Confirm the fuel is not compressed. (When fuel is taken in too much, it may be compressed and may damage rod, etc.)
- Slightly open the throttle valve from the Low speed. (This is a powerful engine. If the throttle is opened too much, the aircraft may make a dashing start)
- Rotate the propeller clockwise 180 degrees back from the position where it is compressed. (Upper side)
- Switch on the electric source.
- Crank the propeller clockwise and the engine will start running rightly.

b) Start by starter (Never do priming)

- Set the throttle valve at the Slowest position.
- Confirm that the starter is rotating counter-clockwise and run the engine idle for five to seven seconds. It then chokes.
- For plug heating at engine starting, two rear plugs are heated. Front plugs are heated naturally after engine is started. and open the throttle valve from the Slowest Speed to about one- fourth for starting.

Important For your safety, we recommend use of the starter.

c) How to Operate and Adjust the Carburetor.

The carburetor is pre-adjusted for best performance. But, a little readjustment may be necessary according to the installation position, type of fuel, or weather conditions.

Ⓖ Adjusting Main Needle Valve

Open the main needle valve about 5 turns depending upon the plugs used and a type of fuel. Set the throttle lever to the low-speed position to set plug heat. Forcibly give forward turns to the propeller. When the engine starts operation, set the throttle lever to the maximum-speed position. Either right or left needle valve may be adjusted first. Explanation proceeds with adjustment of the left needle valve. Loosen the needle valve to a 1/2 turn to enrich a fuel-air mixture. Gradually, throttle it until the peak value is obtained. Take the same procedure for the right needle valve as for the left one until the peak value can be obtained. Adjust the right and left needle valves once more until the peak value can be obtained. After that, loosen both needle valves 1 or 2 divisions (knurled heads). Finely, adjust the right and left needle valves repeating the above operation 2 or 3 times.

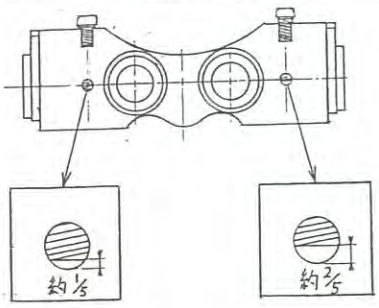

Air-needle pre-set.

The slow needle that is installed on your Saito engine is pre-adjusted at the factory, for best performance. Re-adjustment may be necessary according to the propeller used, the installation of the engine, type of fuel or atomospheric conditions.

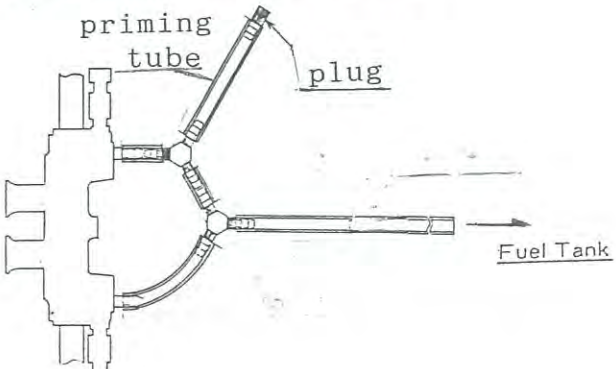

◎ How to Adjust finely the Needle valve

Too much closure may lead to overheating and cause corrosion of the inner surface. It may also cause knocking. Continual knocking leads to damage to the engine.
First set the needle valve at a position in excess of the normal peak position. Fly the plane for about ten minutes. After landing, run the engine at the maximum rpm to obtain the ideal peak position of the needle valve.

Caution:

A. Don't adjust the needle valve when the tank is full.
B. Adjust it when the fuel is low in the tank after a flight.

Ⓗ Break-in

The break-in procedures for all engines should be followed carefully as a proper break-in will achieve the best, long lasting performance. After a start of engine running according to the procedure (F), adjust the needle valve to gain rich mixture and keep the engine running at max. 4,000 - r.p.m. for the first 20 minutes. (For mainly break-in of a connecting rod and a cam gear) Next is to lean out the mixture to achieve the highest RPM for about 30 seconds, then richen it up again to about 6,000 r.p.m. Repeat this procedure every three minutes or so. For about the first 10 flights, you should not fly at peak RPM as the engine is still wearing in. After about an hour of running, check the valve for proper clearance. The engine should now be broken in and function smoothly at all settings. Sometimes, fasten tightly Propeller Nut, nut of Exhaust Pipe etc. When starting engine, keep spectators away and out of path of rotating prop. Make all engine adjustments from behind roating prop. Secure all persons against danger.

Ⓘ Normal Operation and Maintenance

(a) Since excessively throttling the needle valve causes overheating, adjust it somewhat lower than the peak. (Excessive throttling stops the engine and blow-by gas will be increased, which causes rust for bearings. Refer to the above "How to adjust finely the needle valve."

(b) After the first 1 hour of operation, adjust the tappet gap since it has an initial wear. Use the attached open-ended wrench and hexagonal spanner (1.5) to adjust it so that there is a slight gap at compression stroke while the engine is cool. After checking the gap, tighten the lock nut. Hereafter, follow the procedures in item (b) to check the gap from time to time, and adjust the gap so the gauge (thickness 0.1 mm) passes through the gap.

Running with the gap too large may lower the performance.
The tappet gap is a very important element in the maintenance of the four cycle engine.

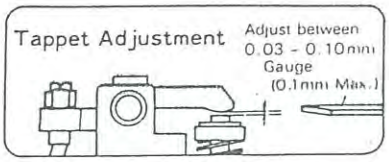

★ Lubrication inside the Engine and Drainage of Waste Oil

For lubrication of the piston, bearing, cam and gear, etc., lubricating oil which has been mixed in the fuel enters the inside through the piston clearance for lubrication.

(c) Lubricate the rocker arm and valve surroundings as required during inspection.

Ⓙ Dismantling

Please do not dismantle the engine. However, pay your attention to the following points in case of dismantling.

ⓐ When assembling, apply engine oil to the tops of screws and fasten them accordingly (If you fasten screws under dry conditions, screws will be damaged so that they need oil)

ⓑ Position piston, rod, rocker arm, pin, push rod,tappet, etc., in the original positions, because they are accustomed to their respective positions even if they are cammon parts. This is a knack to assemble them in the original conditions. When you assemble it, apply engine oil to each part for assembly.

(1) Clearness (2) Apply engine oil to each section (3) Fasten screws averagely. Do not fasten too tight. These are important steps to assemble your engine.

ⓒ If you do not use your engine for a time, take out plug, crank case rear cover so as to wash them completely with petroleum. After clearing, blow away petroleum with air and apply engine oil to them for assembly. Then, pack it in a vinyl bag for storage.

Warning

After starting the engine, operate it behind the propeller. It is dangerous if the propeller will fly. Moreover, tighten the screws occasionally. Use a starter or a pair of gloves for starting.
Always, set an interval of the tappet within 0.1 as shown. Please pay your attention to safety and other troubles.

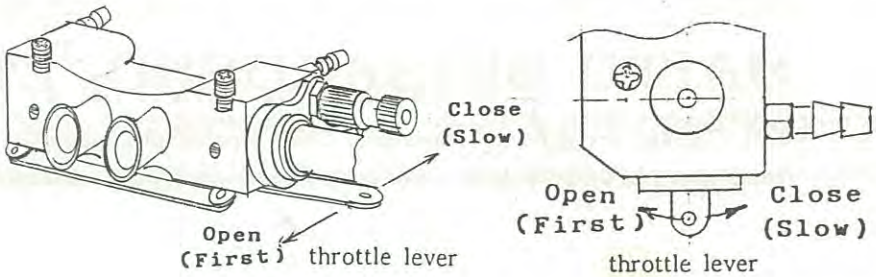

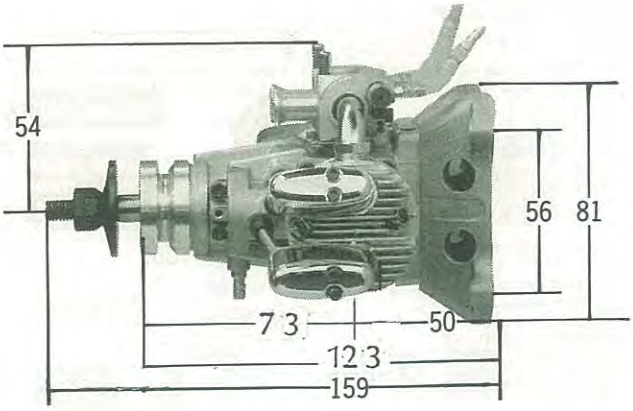

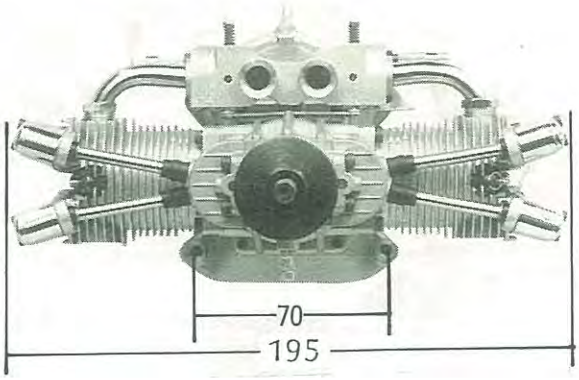

Cam Gears Replacement. When facing engine, assemble the right cam gear first as follows:

1st(Right Cylinder)

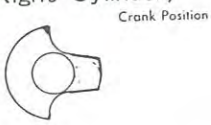

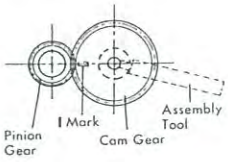

2nd (Left Cylinder)

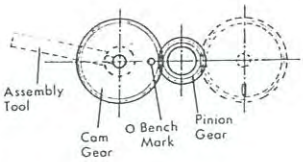

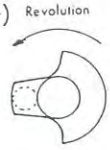

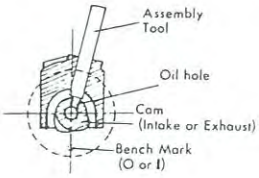

1st (Right Cylinder)
Crank throw at right cylinder top dead center. Insert cam shaft assembly tool into the exhaust pushrod bushing, and rotate camshaft until tool falls into oil hole in camshaft. With camshaft in position and crank at TDC, the gears will mesh at the proper timing point. Bench marks are located on the gears for reference.
2nd (Left Cylinder)
Rotate crankshaft 180 degrees to the arrow mark. Insert timing tool into the intake side of the pushrod opening. Rotate cam gear until the tool enters the oil hole of the camshaft. Gears are now lined up with the bench marks. Study diagrams carefully.
When reassembling your engine, it is very important that the same pistons, rods, valves, etc., all go into their original positions. Clean all parts well, and then oil with clean engine oil. Alternate the tightening of screws and do not overtighten.

※ WARNING

Safety is the most important thing to remember when operating model engines.
After starting, make sure everybody is behind the propeller and away from the side arc.
These are the danger areas if the propeller were to come loose.
Tighten the propeller screws regularly.
Always use a pair of gloves when starting a model engine along with a good pair of safety glasses.

All specifications snd models are subject to change without notice.

SAITO SEISAKUSHO, CO, . LTD.
22-7, Tokagi, 3-chome, Ichikawa-Shi, Chiba Prefeture, 272-0024, Japan.
Telephone No. 047-378-4156 FAX No. 047-378-4155

Saito FA-182TD·Parts List

NO	Description	Q'ty
01	Cylinder (left)	1
02	Cylinder (right)	1
06	Piston	2
07	Piston pin	2
08	Piston pin retainar	4
09	Piston ring	2
10	Connecting rod	1
11	Linked conrod	1
14	Cylinder screw set	2set
15	Crankcase	1
19	Breather nipple	1
20	Front bearing	1
22	Rear bearing	1
23	Crankshaft	1
27	Taper collet & Drive flange	1ea.
28	Prop washer & Nut	1ea.
31	Crankcase screw set	1set
32	Engine gasket set	1set
33	Cam gear housing	2
34	Cam gear (left)	1
35	Cam gear (right)	1
36	Cam gear shaft	2
37	Steel & Washer set	1set
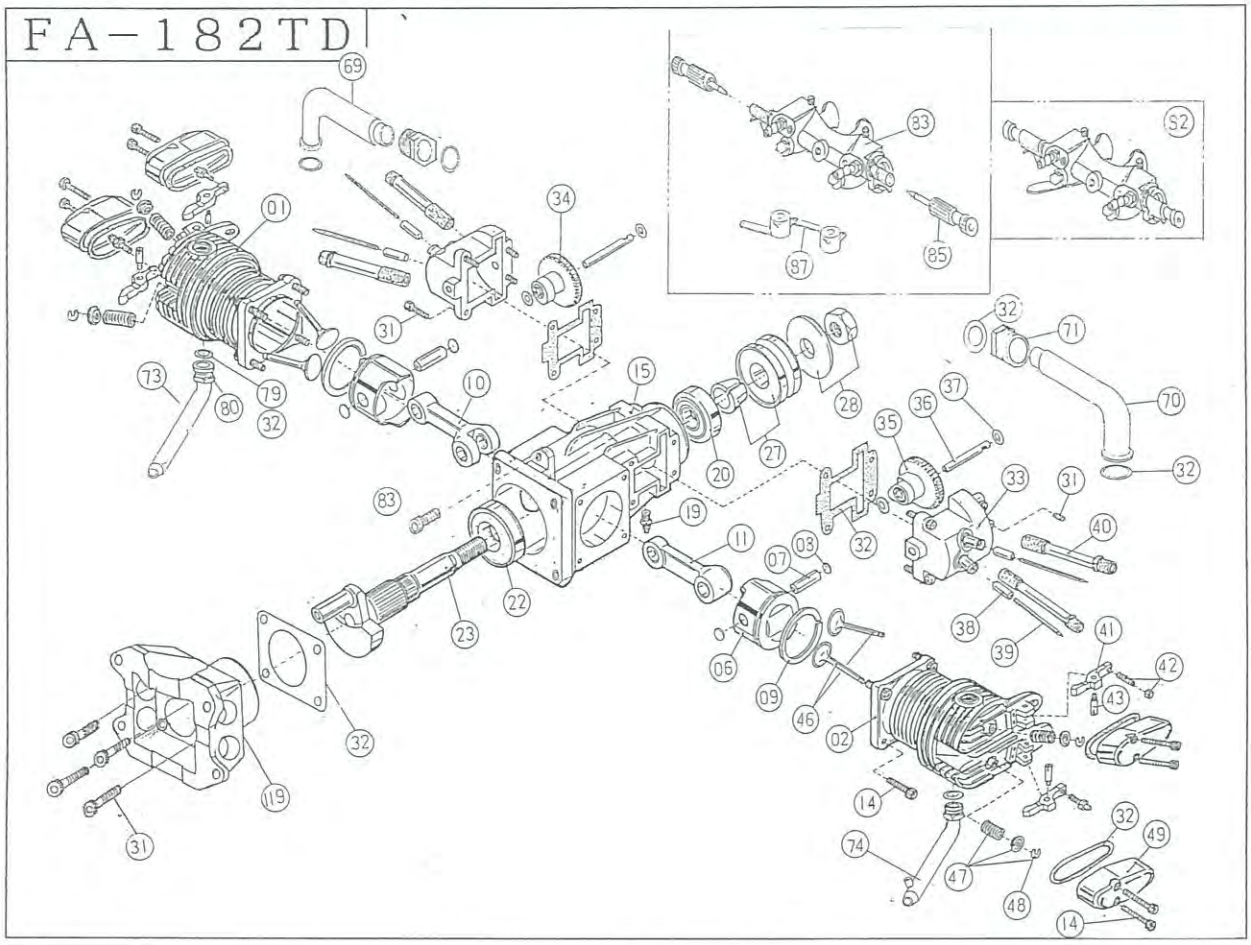
NO	Description	Q'ty
38	Tappet	4
39	Pushrod	4
40	Pushrod cover & Rubber seal	4ea.
41	Rocker arm	4
42	Rocker arm screw & Nut	4ea.
43	Rocker arm pin	4
46	Valve (in & out)	4
47	Valve spring & Keeper & Retainer	4ea.
48	Valve retainer	/
49	Rocker arm cover	4
69	Intake manifold (left)	1
70	Intake manifold (right)	1
71	Intake manifold nut	2
73	Muffler (left)	1
74	Muffler (right) (with nipple)	1
79	Muffler gasket	2
80	Muffler nut	2
82	Carburetor complete	1set
83	Carburetor body assembly	1set
85	Full throttle needle	2
87	Throttle barrel assembly	1set
119	Rear cover & engine mount in one	1