Instructions for FA-90Ts Flat Twin AAC 4 Stroke Engines

We would like to express our sincere thanks for your purchase of the Saito FA90TS twin cylinder engine which is manufactured by Saito Seisakusho, Ltd. Please read our instructions carefully and treat your engine with care. Should there be a manufacturing defect, Saito Seisakusho, Ltd. will make any necessary repairs free of charge.

Saito is pleased to announce the long awaited FA90TS, twin cylinder four stroke engine featuring:

a) **Easy handling**
b) **Smooth power**
c) **Low vibration**

While the FA90TS weighs more than a single cylinder engine, it has a smooth power curve and very realistic sound. It is *perfect* for scale models that require realistic appearance, sound and performance!

FA-90Ts

Saito engines unique features include :

Cylinder - Hard-chrome plated cylinder bore increases the engine 's durability. The cylinder and head are a single unit. This design results in non-distortion of the cylinder bore and better heat dissipation.

Piston - High silicone content aluminum is used in the piston construction. It also has a compression ring that increases the engine's efficiency.

Crankshaft - Made of solid chrome molybdenum steel. It is supported by two ball bearings.

Cam gear - Introduced high cam design to get longer maximum valve lifting time.

Valve - Large diameter intake and exhaust valves increase combustion efficiency.

Carburetor - Utilizes Saito's choking device. It is easy to use and helps the engine run smoother at low r.p.m.s.
When operating at low speed, you can adjust the mixture with the idle needle. (Screw it in for a leaner mix and out for a richer mixture.)

Prop.lock device; designed to positive lock for safety feature (also handy to install prop. spinner).

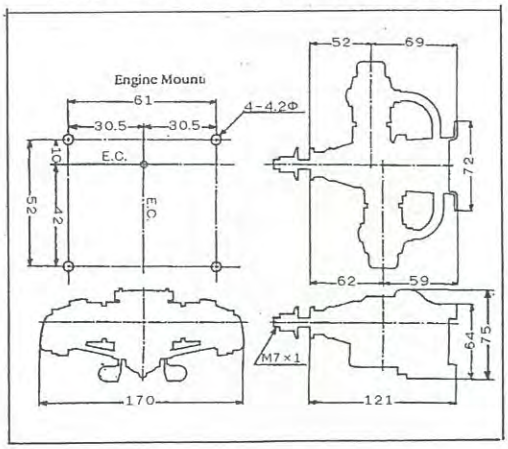

Explanation of 4 Stroke Cycle Engine

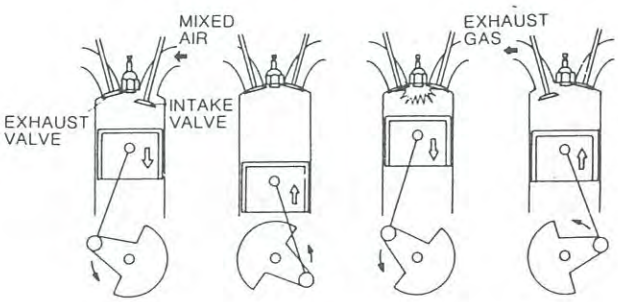

1. Intake Stroke 2.Compression Stroke

3.Expansion Stroke 4.Exhaust Stroke

The four stroke engine consists of four individual piston movements as illustrated above. "Stroke" means that the piston is moved from the upper dead center to the lower dead center point. In the four stroke engine, one cycle is completed every two revolutions of the crankshaft.

Accessories for the **FA-90Ts**

1. *Screwdriver for the idle needle adjustment*	*1 each*
2. *Spanner for tappet adjustment screw*	*1*
3. *Hexagonal spanner wrench (3, 2.5, 2, 1.5)*	*1*
4. *Tappet adjusting screw gap gauge*	*1*
5. *Needle valve extension bar*	*1*
7. *Muffler w/gasket*	2
8. Glow plug fitted in the engine	2

Specifications

	Data for FA-90TS
Bore	22.4 ϕmm ×2 — 14.98cc
Stroke	19.0 mm ×2
Practical Rev.	About 2,000 ~10,000 rpm
Fuel flow	1 minute / 28cc (13" x 6") At full throttle, Fuel: synthetic oil system with 10~20% nitro
Weight	Approx. 723g
Propeller	12'x8' ~14'x6'
Use	Perfect for 30 to 40 size scale R/C aircraft (2cycle) or wherever a realistic small 4-stroke twin is desired.

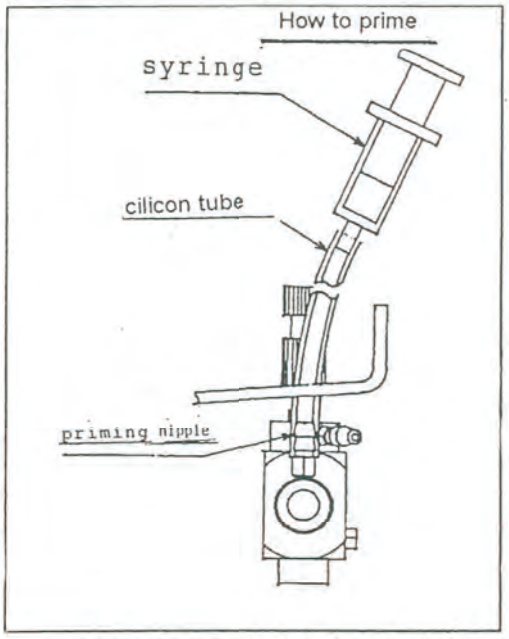

For priming, inject appropriate quantity of fuel (about 1 - 2 cc) into carburetor with a syringe etc. as illustrated.

A. Fuel

It is very important for engine to use high quality fuel containing 10~20% nitro. For consistent performance and long engine life, use fuel containing **AT LEAST 20%** lubricant by volume. **(DO NOT USE LOW OIL FUEL)**
Since the 4-cycle engine has high exhaust temperature and carbon is apt to accumulate when caster oil type lubricants are used. The fuel filter is to be installed and SAITO F-1 is designed for this model engines. **SAITO fuel filter "F-1" exhibits highest performance.**

B. Plug **Use of SAITO "SAI GP01" (SS) Glow Plug is recommended.**

The Saito P-3 glow plug is recommended due to the mechanics of the 4 stroke engine ... one explosion every two revolutions. Therefore, your plug selection is critical for peak engine performance.

C. Propeller

Select your propeller according to the type of aircraft you will be operating. Choose a suitable prop from the following table and avoid operating the engine above 10,000 r.p.m. *NOTE - Always balance your propeller before use and keep hands away from the propellers arc. Wear safety glasses and gloves when starting or adjusting your engine.*

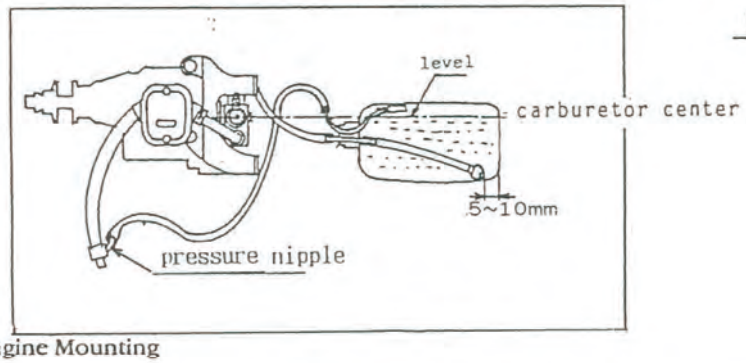

Carburetor·Adjustment

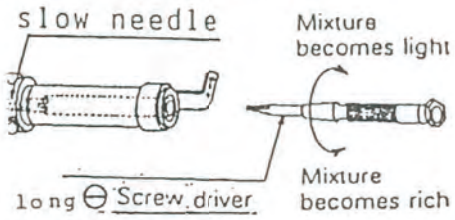

D. Engine Mounting

Your engine can be mounted in any direction required. However, we recommend using the vertical or horizontal position if possible. An inverted engine may be damaged upon landing and requires that the glow plug be removed, with the prop turned over several times to remove any excess fuel, after each flying session.

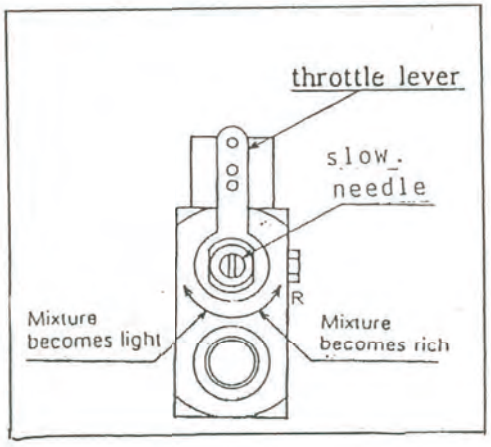

E. Fuel Tank

We recommend a tank with a capacity of 330~360cc
Mount the fuel tank approx. 5mmm lower than carburetor center.

F. Engine Starting Procedure - *Note - Always use muffler pressure.*

Manual Starting -

1) Rotate the propeller clockwise. When compression is felt, adjust the propeller so it will be in the vertical position.
2) Fully open the throttle valve.
3) Open the throttle needle about 3 turns ... when breaking in the engine, open it about 5 turns for a richer mixture.
4) For priming, inject appropriate quantity of fuel (about 1 - 2 cc) into carburetor
5) with a syringe etc. as illustrated.
6) Rotate the propeller counter-clockwise about 3 turns to draw fuel into the carburetor.
7) Make sure that fuel has not flooded the cylinder by rotating the propeller slowly. If fuel has filled the chamber, damage may occur to the connecting rod and etc.
8) Slightly open the throttle valve from the low position. Note - You don't want to have the aircraft start at too high a speed making it hard to hold on to !
9) Rotate the propeller clockwise 180 degrees back from the position where it is compressed.
10) Switch on the electric source and crank the propeller clockwise. The engine will start, running in the correct direction.

Electric Starting -

1) Set the throttle at the lowest position.
2) Make sure that the starter is rotating counter-clockwise. With the starter, rotate the engine for about 5 seconds which will draw fuel into the system.
3) Switch on the electric source to the glow plug and open the throttle valve about 1/4 open. Start the engine.

Operating and adjusting the carburetor -

The carburetor that is installed on your Saito engine is pre-adjusted, at the factory, for best performance. During factory set up, the throttle is set so the engine operates at its lowest r.p.m. Even though the carburetor has been factory adjusted, periodic re-adjustment may be necessary depending upon the propeller installed and flying conditions.

1) Rotate the throttle needle 3 turns open.
2) Start the engine by opening the throttle valve 1/4 of the way.
3) Fully open the throttle and adjust the needle for peak r.p.m.'s but Do Not Exceed 10,000 r.p.m.'s !
4) Close the throttle slowly and adjust the idle.

A) The fuel mixture is too rich when ... you open the throttle suddenly wide open from idle and find the engine emits white smoke and slowly increases r.p.m.'s.

Solution ... Turn the idle needle clockwise with a small screwdriver.

b) The fuel mixture is too lean when ... the engine stops if the throttle is set at the lowest r.p.m. Or, the engine stops when the throttle is opened suddenly wide open from idle or when the aircraft is pointed straight up.

Solution ... Turn the idle needle counter-clockwise with a small screwdriver.

5) When the correct idle is obtained, set the low r.p.m. with the throttle adjusting screw.
6) Do the above mentioned adjustment until the engine briskly responds to the throttle movement.

How to fine tune the full throttle needle -

Operating your Saito engine in a too lean condition may cause overheating and corrosion of the inner surfaces. It may cause engine "knocking" which can also damage the engine. Set the full throttle needle at a position richer than the peak r.p.m. area. Fly the model for about 10 minutes. After landing, re-adjust the needle for peak performance but Do Not Exceed 10,000 r.p.m.s.

CAUTION - Do not adjust the full throttle needle when the fuel tank is full. Rather , adjust it when the fuel tank is less than 1/2 full to avoid lean runs which may damage your engine.

G. Engine Break-In -

For long, reliable engine life, a gentle break in is required. While Saito uses the most modern equipment and materials to produce model engines ... to protect your investment follow this simple procedure. After starting the engine, according to F above, operate the engine at a (About 4,000 r.p.m.) rich setting for the first 20 minutes of operation. Next, lean out the mixture to achieve the highest r.p.m. for about 30 seconds, then richen it up again so the max. r.p.m. is 6000. Repeat this procedure every three minutes or so and when flying do not operate the engine at peak r.p.m. for the first 10 flights. After about one hour of operation, check the valves for proper clearance. Your Saito engine will now be broken in and functioning smoothly at all engine settings.

H. Remember these general operating procedures -

1) Do not operate your engine too lean at full throttle. This will cause the engine to run hotter and damage the bearings, connecting rods and gear.
2) When installing the muffler, oil both the external screw on the muffler and the threaded portion of the cylinder.
3) Regularly check the screws and nuts on the muffler and engine for tightness.
4) After operating the Saito FA90TS for one hour, you should check tappet clearance. If the supplied gauge fits loosely, the tappets need to be adjusted. See diagram. ⟶ Always set the tappets between 0.03 and 0.10 mm and make sure to tighten the lock nut securely.
5) While oil contained in the fuel lubricates the piston, bearings and etc., the rocker arm and valve assembly should be lubricated whenever an inspection of these areas indicates a need.
6) Engine breather nipple - We suggest you attach a length of silicone tubing to the breather. This will route expelled oil away from the engine compartment.

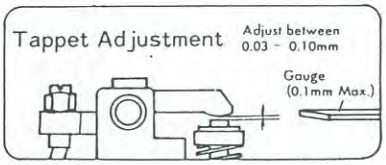

I. Dismantling the engine -

Do Not take your engine apart unless necessary ! However, if necessary follow the next instructions:

a) The cylinder screws should be loosened in a criss cross pattern. If they are loosened improperly, you may distort the cylinder.
b) Assemble it with the same criss cross method, applying engine oil to the tops of the screws. If you tighten the screws without oil, you may cause damage to the threaded areas.

First, unscrew the lock nut on the rocker arm. Then loosen the rocker arm adjustment screw 3 mm so you can move the push rod freely.

Position the piston, rod, rocker arm, pins, pushrod,,tappet, etc., in their original positions. Engine parts are mated after running and they must be returned to their original position. When you do assemble your engine, apply engine oil to each part.

1) Locate the crankshaft and crankcase alignment marks (arrow).
2) Make sure the tappet has not entered the camshaft area.
3) Locate the cam/gear reference mark and align with the crankcase mark (arrow).
4) First, insert a spacer into the counter gear shaft and put the counter gear into this shaft. Then, put another spacer into the same shaft

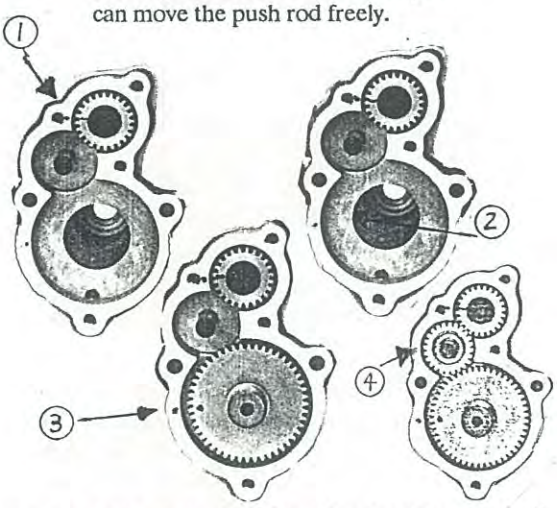

Also remember :

Cleanliness when working on your powerplant.
Lubricate each part with engine oil.
Fasten the screws firmly but do not over tighten.

e) If you do not use the engine for a period of time ... remove the glow plug and rear cover. Lubricate both with engine oil. After wiping the engine down, blow away any excess oil with air and apply a light coat to all exterior parts. Place your FA-90Ts in a plastic bag for long term storage.

WARNING !!

Safety is the most important thing to remember when operating model engines.
After starting, make sure everybody is behind the arc of the propeller.
Check the propeller screws regularly for proper tightness.
Always wear safety glasses and gloves when starting a model engine.

All specifications and models are subject to change without notice.

SAITO SEISAKUSHO, CO. , LTD.
22-7, Tokagi, 3-chome, Ichikawa-Shi, Chiba Prefecture, Japan
Telephone # 0473-78-4156 FAX # 0473-78-4155

SAITO FA-90TS Parts List

NO	Description	Q'ty
01	Cylinder(left)	1
02	Cylinder(right)	1
06	Piston	2
07	Piston pin	2
08	Piston pin retainar	4
09	Pistón ring	2
10	Connecting rod	2
13	Connecting rod screw	4
14	Cylinder screw set	2set
15	Crankcase	1
17	Rear cover(A)	1
18	Rear cover(B)	1
19	Breather nipple	1
20	Front bearing	1
21	Main bearing	1
22	Rear bearing	2
23	Crankshaft	1
27	Taper collet & Drive flange	1ea.
28	Prop washer & Nut	1ea.
31	Crankcase screw set	1set
32	Engine gasket set	1set
35	Cam gear	1
37	Teflon & steel Washer set	1set
38	Tappet(Valve lifter)	4
39	Pushrod	4
40	Pushrod cover & Rubber seal	4ea.

NO	Description	Q'ty
41	Rocker arm	4
42	Rocker arm screw & Nut	4ea.
43	Rocker arm pin	2
46	Valve (in & out)	4
47	Valve spring & Keeper & Retainer	4ea.
49	Rocker arm cover	2
52	Countergear	1
53	Countergear shaft	1
69	Intake manifold(left)	1
70	Intake manifold(right)	1
71	Intake manifold nut	2
73	Muffler(left) /nut	1
74	Muffler(right) /nut w/pressure	1
79	Muffler gasket	2
82	Carburetor complete	1set
83	Carburetor body assembly	1set
85	Full throttle needle	1
87	Throttle barrel assembly	1set
91	Intake manifold Connecter	2
95	Engine mount(right & left)	1set
99	Muffler bracket set	1set
104	Cam gear bearing(rear)	1
105	Cam gear bearing(front)	1
106	Cam gear bearing shield	1
110	Anti-loosening nut	1
131	Throttle valve extension adopter	1

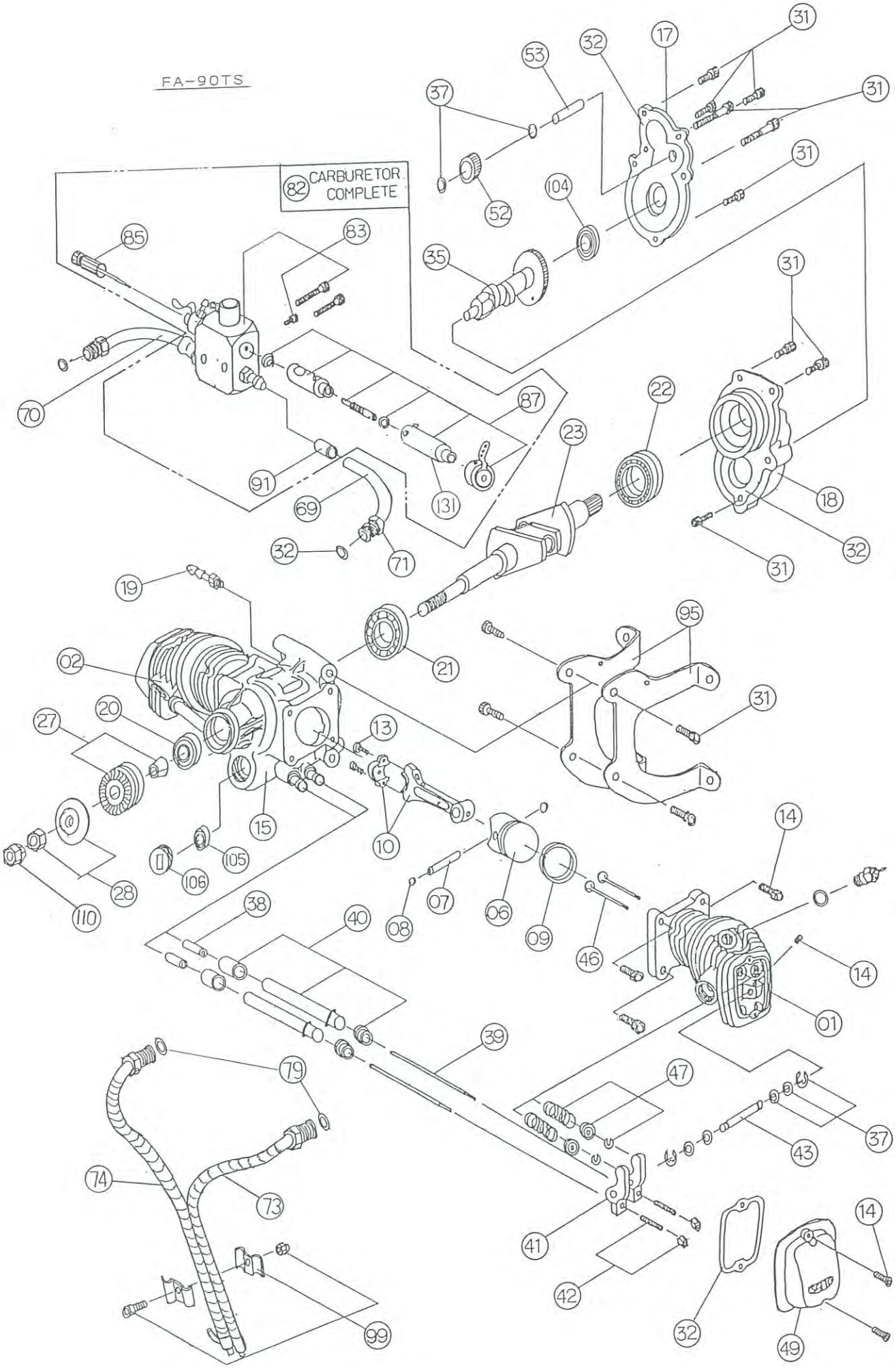
FA-90TS
82 CARBURETOR COMPLETE
31
32
17
53
37
52
104
35
85
83
70
87
91
69
131
71
22
23
18
19
02
21
95
20
27
13
15
10
105
106
28
110
14
07
08
06
09
46
38
40
01
39
79
47
43
74
73
41
42
99
49