Instructions for

SAITO FA-91S/91SGK (AAC) 4-Stroke Engines

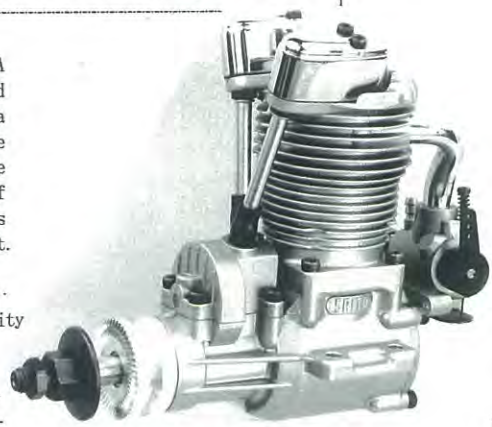

We would like to express our sincere thanks for your purchase of the SAITO FA-91S/91SGK engine, which is manufactured by Saito Seisakusho, Ltd. Please read our instructions carefully and treat your engine with care. Should there be a manufacturring defect, Saito Seisakusho, Ltd. will make necessary repairs at free of charge. You will notice a letter (A, A, C etc.) stamped on the top of the right mounting lug. This identifies the production version of your engine. If you ever need to order a part or have a question about your engine, specify this letter along with the part number you need so we can better handle your request.

This engine is designed and manufactured based on high efficiency and durability of the first AAC method in the world.
AAC : Aluminum Piston, Aluminum Cylinder, Hardchrome Plated

Unique features of SAITO FA-91S/91SGK engines include:

- Cylinder — Thanks to the monolithic structure of cylinder head and cylinder with direct hard chrome plated inner surface without using cylinder liner, this engine emphasizes durability while it also offers lightweight and distortion-free structure with improved cooling efficiency.
- Piston — High silicon content aluminum is used in the piston construction. It also has a compression ring that increases the engine's efficiency.
- Crankshaft — Made of solid chrome molybdenum steel, and supported by two ball bearings.
- Combustion chamber — Increased combustion efficiency with improved hemispherical shape.
- Cam gear — Our front mounted cam gear design results in a compact engine.
- Cam — Features high-output type high cam.
- Carburetor — High-performance type with slow adjustment equipped.
- Propeller nut — Double nut design to prevent fall-off for safety.
- Exhaust sound — Real-plane-like exciting exhaust sound.
- Weight — Lightest in the class.

Explanation of 4 Stroke Cycle Engine

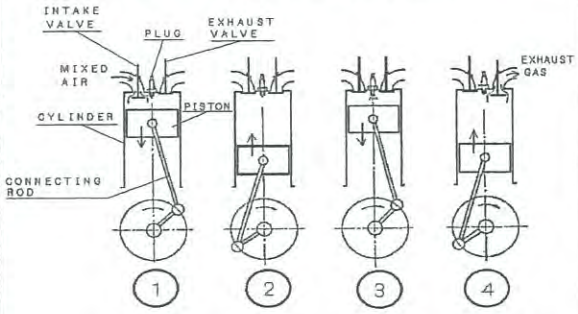

The four-stroke engine consists of four individual piston movements as illustrated above.
"Stroke" means that the piston is moved from the upper dead center to the lower dead center point.
In the four-stroke engine, one cycle is completed every two revolutions of the crankshaft.

① Intake stroke ② Compression stroke
③ Expansion stroke ④ Exhaust stroke

FA-91S/91SGK Technical Data

Bore	28.2 mm dia.	Stroke	24.0 mm
Stroke volume	14.99 cc	Weight	Approx. 504g, engine only (Approx. 555g w/muffer)
Practical speed	Approx. 2,000~11,500rpm (Recommended highest speed on ground: 9,000~11,000 rpm)		
Propeller (Standard)	12"X 9"~12"X10" 13"X 7"~13"X 9" 14"X 6"~14"X 8"	Fuel flow	Approx. 37cc/minute (at full throttle, appox. 10,000 rpm) Fuel flow varies depends upon propeller load. More fuel flow with larger load and less fuel flow with smaller load. (In actual flight, fuel flow somewhat increases.)
Fuel	Synthetic oil with 10~20% nitromethane content		
Static thrust	APC 13"X7" — 2.3kg APC 13"X8" — 1.8kg APC 14"X6" — 2.8kg	Application	Airplane of 2-cycle 45~60 class RC Stunt Airplane, Scale Airplane, Sports Airplane CL Stunt Airplane
Accessories	Spanner for tappet adjusting screw ····· 1 each Tappet adjusting screw gap gauge (0.1t) ····· 1 each Hexagonal spanner (wrench) (1.5, 2.0, 2.5) ····· 1 each		Main needle valve extension bar ····· 1 each Muffler Set ····· 1 set P-S glow plug (attached to the engine) ····· 1 each

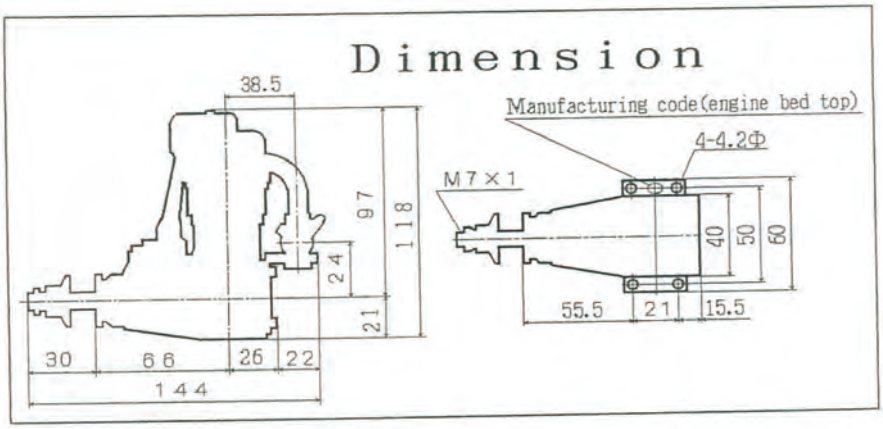

A. Fuel

It is very important for engine to use high quality fuel containing 10~20% nitro. For consistent performance and long engine life, use fuel containing **AT LEAST 20%** lubricant by volume. **(DO NOT USE LOW OIL FUEL)** Since the 4-cycle engine has high exhaust temperature and carbon is apt to accumulate when caster oil type lubricants are used. The fuel filter is to be installed and SAITO F-1 is designed for this model engines.

SAITO Fuel Filter "F-1" exhibits highest performance.

B. Fuel tank

Please select best fuel tank available in the market referring to the data for the capacity.
Set the level of fuel in the tank to the height that is roughly the same ith that of inlet nipple of carburetor.
Also, put a weight to the fuel inlet at a distance of approximately 3~5 mm from the rear wall of the tank.

※ Check for the crack in the aluminum pipe and silicon tube in the tank.
Since SAITO engine employs muffler pressure, careful attention is required for the leakage.
Also, be careful not to make length of piping silicon tube unnecessarily long.
(Watch for possible crack.)

C. Plug

Since one explosion occurs in every two rotations in 4 stroke engine, selection of the plug is critical.
Use of improper plug results in a trouble of engine.
Since performance of the engine varies according to the matching with the fuel or to the season, we recommend testing various types for the best performance.
(Some plug type of the other manufacturer exhibits good match with SAITO engine. Also, performance of the plug deteriorates after many flight hours even if it is not broken, frequent exchange of the plug with new one would be necessary.)

Use of SAITO "SAI GP01" (SS) Glow Plug is recommended.

D. Propeller

It varies according to the body of airplane, however, standard size ranges from12"X9"~12"X10", 13"X7"~13"X9" and 14"X6"~14"X8" (as just a guideline).
Please select the one available in the market with high reliability. (We recommend APC.)
Thorough balancing must be carried out. (Use balancing device is recommended.)
Use of unbalance propeller creates excessive vibration, reduces performance and is dangerous.
If you find flaw etc., replace it with new one, as it is dangerous.

Avoid operating the engine beyond 11,000 rpm with light load propeller on the ground and below 8,500 rpm with large load propeller otherwise crankshaft, bearings, connecting rods, cam gears, etc. may be damaged.

Use propeller that matches to the airplane and turns in good condition in the range of 9,000~10,500 rpm on the ground in view of the characteristics of this engine. (If propeller size is not in the standard, it is OK as long as the speed is within this range.)
Speed varies depending upon the manufacturer and also, in some instances, it occurs with the propellers in the same size those manufactured by the same manufacturer. We recommend testing various propellers.

E. Engine Mounting

Your engine can be mounted in any direction required.
However, we recommend using the vertical or horizontal position if possible.
An inverted engine may be damaged upon landing and requires that the glow plug be removed, with the prop turned over several times to remove any excess fuel, after each flying session.

Use of SAITO Engine Mount is recommended

To prevent loose engine mounting, application of small quantity of rubber adhesive on the tip of M4 cap screw is effective.

F. Preparation before Staring Engine

① Engine must be mounted to the sturdy test bench with correct parallelism or to the body of airplane.
(Engine must be firmly fixed ineither case so that it does not move.)
② For the break-in on the bench, use fuel tank with a capacity between 400 and 500cc.
For airplane body, use the one already installed.
③ For the fuel, use the one with approximately 15% nitro-content except low oil content.

④ For the propeller, prepare APC 13"X8" propeller (around 9,900~10,000rpm at standard).
※ To fix propeller, turn drive flange in forward direction (counterclokwise) and when pressure is felt, place propeller in horizontal position and fully tighten double nut to fix. (Spinner must also be attached, as the starter will be used.)

Caution: Additional tightening of the propeller must be made after every 10 flights. In particular, if you are using wooden propeller, it would be compressed so that the nut can be easily loosened. Therefore, careful and thorough additional tightening is required.

⑤ Since 4-stroke engine does not clearly exhibit peak condition like 2-stroke engine, use tachometer to prevent over-squeeze or overheating.
⑥ Attach silicon tube to the breather nipple to check the exhaust of breather (to check oil flow).
⑦ Muffler pressure must be used without fail. (Make sure that no leakage is occurring from the tank.)
⑧ Prepare necessary materials and tools for plug heat.
⑨ Prepare the starter and battery.

Caution: If any spectator is watching nearby, please ask the one to move backward prior to start the engine. Also, the arm that holds airplane must be keptaway from the prop. When the engine is started, move to the back of airplane. Any operation like needle adjustment must be carried out from the back of airplane. If airplane is not fixed, it is safe to ask your assistant to hold the airplane.

G. Engine Starting Method

Following procedure describes the condition in which engine is mounted to the body of airplane.
(A) Starting method with a starter. (For your own safety, this method is recommended.)
① First turn on the switch of transmitter. Next, turn on the switch of receiver unit to check throttle action and then, set throttle stick at the position fully closed.
② Open main needle by about 4 turns. (This is just a guide.)
③ Open throttle valve 1/4 to 1/3 from fully closed position with throttle stick. (Start with excessively opened throttle is dangerous as the airplane jumps forward.)
④ Turn propeller in reverse direction (clokwise) until engine is compressed.
⑤ Power the plug.
⑥ When the starter is activated for about 5 seconds, engine will start easily.

Caution: Do not start the engine with starter at the position where engine is compressed in forward direction, at it is dangerous.

(B) Manual starting method (For the safety, wear gloves and safety stick etc.)
① First turn on the switch of transmitter. Next, turn on the switch of receiver unit to check throttle action and then, set throttle stick at the position fully closed.
② Open main needle by about 4 turns. (This is just a guide.)
③ Set throttle valve at full open with throttle stick.
④ Close the exit of the muffler with hand and thrn propeller 2 to 3 turns forcibly in counterclockwise to choke.

Caution: Excessive fuel intake compresses fuel and may damage connecting rod etc. Crank 1 to 2 turns with hand and check if no fuel compression has occurred.

⑤ After throttle valve is fully closed once with throttle stick, open throttle valve 1/4 to 1/3 with throttle stick. (Start with excessively opened throttle is dangerous as the airplane jumps forward.)
⑥ Turn propeller in forward direction (counterclockwise) to feel compression (propeller in horizontal).
⑦ Power the plug.
⑧ After the plug is powered, wait for a few seconds and, when the propeller is forcibly cranked in clockwise direction, engine starts in forward direction by the explosion counteraction.

Caution: In case of 4-stroke engine, do not try to start engine manually in forward direction from the point where the engine is in compressed condition like in the case of 2-stroke engine, as your finger may be injured due to reverse action of the engine. Above starting method must be followed without fail.

H. Engine Break-In

As the break-in is an important procedure to pull out maximum performance of the engine, it must be cautiously implemented.
① After fuel tank is filled up, start the engine as described in the above.
② After opening of throttle valve is set approximately 1/2 or less (just as a guide) with throttle stick, adjust engine speed to satabilized condition at approximately 6,000 rpm or less in rich condition with main needle valve is opened 5 turns or more while carefully watching tachometer and exhaust oil density and discharge density from the breather. Run the engine in this condition for full tank fuel consumption. (Plug heated condition may also be employed if the case allows.)

Caution: Absolutely, never make fuel mixture to lean condition in stage. Even if you drop the speed to the idling speed and run the engine at low speed, seizure would occur if the mixture is lean. Object of this break-in is initial familiarization of connecting rod, gears, moving parts and so on in the condition Mainly with rich fuel mixture

③ Next, set throttle valve at full open and run the engine in rich condition for full tank.
(In this stage, exhaust oil density and discharge density from the breather must also be checked.)
④ Then, run the engine at just before 9,000~9,500 rpm for half tank.
⑤ Finally, run the engine at peak speed and less speed alternatively and if the engine runs at peak speed without unevenness, ground break-in has completed for the time being. Then, after tappet clearance is adjusted according to the procedure described in Article J and carburetor is also adjusted according to the following article, and after around 10 flights at less speed, break-in will be completed.

Caution for the flight: For early flights, fly airplane in the windward and keep high altitude and distance so that the airplane is able to return to the airfield even if the engine has stopped. If you fly airplane at low altitude from the beginning, body of airplane may be damaged at emergency landing due to engine trouble.

I. Handling and Adjustment of Carburetor

Basic step for the adjustment of carburetor are first obtaining peak speed (maximum speed) by adjusting main needle and then, set idling speed (slow speed) using throttle valve and slow needle. (Vice versa is not possible, however.)

① After fuel tank is filled up, start engine as described in Article G. After throttle valve opening is set at full open with throttle stick, cautiously obtain peak speed with main needle while watching tachometer and listening to the exhaust noise.

> Caution: Excessive closing of main needle is very dangerous, as the propeller nut becomes loose. In such occasion, immediately turn the main needle in counterclockwise to loosen.

② Next, slowly close throttle valve and cautiously adjust the speed using a screwdriver for slow needle and throttle stick for throttle valve opening so that the engine runs at an idling speed in the range of around 2,000~2,500 rpm in stable condition. (See the figure below)

③ Once idling speed is set, slowly open the throttle valve to full open. If the speed becomes irregular or suddenly increases in this process, carefully make fine adjustment with slow needle so that the speed changes linearly from the idling to the peak speed.

④ When the above sdjustment has completed, quickly change the speed from idling to its peak. If the speed does not reach at its peak simultaneously with the condition of throttle valve fully opened, return main needle by single knurl notch. Then, quickly change the speed from idling to its peak, again. Repeat this procedure cautiously until you can obtain good response.

⑤ When all conditions are set, return the adjustment by 2 to 3 knurl notches (or about 300 rpm slower).

> Caution: When peak speed with full tank fuel is at 9,900 rpm, reduce speed by 300 rpm to set it at 9,600 rpm. It is the key for longer service life to run the engine at a speed slower than its peak by around 300 rpm and the bearings would hardly get rust.

> ※ Use standard values shown in the following figure as the standard for carburetor slow needle opening adjustment, though slight adjustment is required according to the engine mounting position, propeller type, fuel type, plug, weather condition, and so forth.
> For perfect adjustment, it is recommended to carry out fine adjustment while flying the plane and sounding out the positions those best matched for each of slow, medium and high-speed.

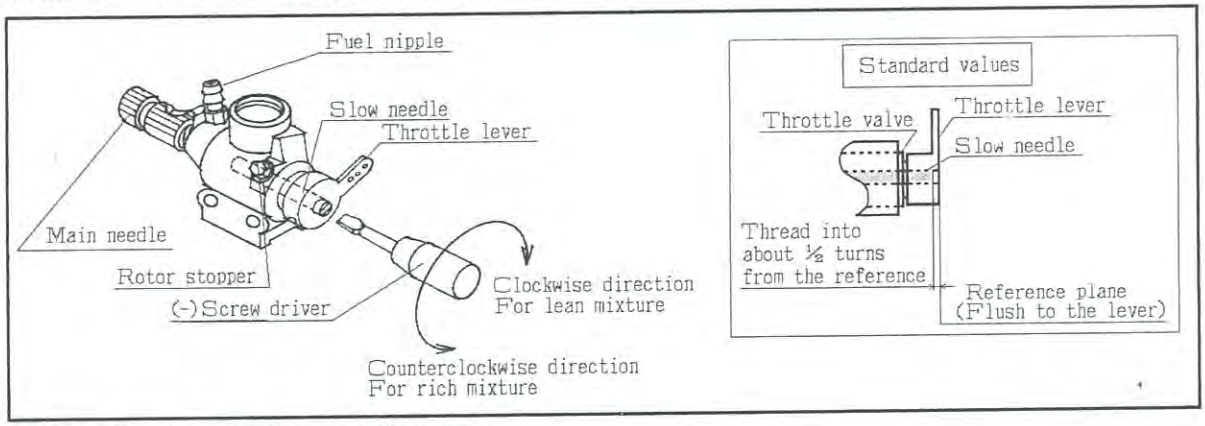

J. Normal Operation, Maintenance and Supplements

① Do not operate your engine too lean at full throttle, as it will cause overheated engine. Adjust it slightly slower than the peak. (Too lean operation causes knocking, stoppage and negative influence on the connecting rod and cam gear.)

② Tappet gap adjustment
After operating the engine for one hour, you should adjust tappet gap (valve clearance) because of initial wear. Adjustment of tappet gap must be carried out while the engine is cold.
For the adjustment of tappet gap, remove plug and rocker arm cover and when the propeller is slowly turned in forward direction with hand, rocker arm stops. If you turn the propeller further, piston reaches at its top dead center of compression. Then, make adjustment using attached spanner and hexagonal wrench so that it comes indefinitely close to zero while the compression exists at the position. When the gap is checked, securely fasten (but not excessively) the locking nut.
※ In case of actual automobile engine, small gap is provided by anticipating valve elongation. However, in the case of our engine, gap becomes larger during operation as elongation of cylinder (aluminum) is larger than that of the valve, therefore, the gap must be set indefinitely close to zero while the engine is cold.

> After this adjustment, tappet gap must be checked from time to time with the above procedure. If attached gauge (limit gauge, t=0.1mm) can be inserted gap becomes too large and adjustment must be made. Tappet gap is the most important factor in the maintenance of 4-stroke engine. If the engine is operated with excessive gap, it would result in poor perfomance.

③ When exhaust pipe is fixed to the cylinder and propeller nut is fixed, apply small quantity of silicon rubber (not excessively) on the thread section and screw it in. It prevents leakage and loosening.

④ Additional tightening of propeller nut and exhaust nut (while it is hot) must be carried out from time to time.

⑤ After the flight, lubricate entire engine with spray type preserve lubricant through the carburetor or breather.

⑥ If the engine is not operated for any longer period of time, remove the plug, rear cover, head cover, etc. from the engine and clean them thoroughly with alcohol. After lubrication, reassemble them to the original condition and put a plastic cover on it.

⑦ If the engine is stopped with much mixture, bearings in crankcase may get rust. Run your engine for about 10 seconds at maximum speed before it is stopped and cut off the fuel to stop.

⑧ To prevent wear and seizure of rotating section and sliding surface of the engine, necessary areas are lubricated with black molybdenum oil. When the engine is in operation, black waste oil is produced from breather nipple, muffler, etc., however, you can continue your operation, as it is normal. It occurs in break-in stage.

⑨ Piston, bearings, cam gear, etc. are lubricated by the oil that comes into crankcase through the gap between cylinder and piston.

⑩ To discharge waste oil, connect silicon tube etc. to the breather nipple located under the front for the discharge outside of the airplane.

⑪ Safety is the most important element when operating model engines. Be careful not to cause trouble to others.

⑫ Engine for model airplane is not a toy. Handle it with extreme care.

K. Hints for Disassembly/Assembly Work

Disassembling and assembling of your engine are not recommended, however, follow the following instructions when necessary.

① For the dismantling, put bench marks on the parts by yourself(use marking pen etc.) while checking direction of parts in proper sequence. Also, clean each part.
In particular, careful attention is required on the valve timing, valve inlet and exhaust, piston direction, connecting rod direction, and so forth.

② The cylinder screws should be loosened little by little in a crisscross pattern.
If they are loosened improperly, you may distort the cylinder.

③ Assemble it with the same crisscross method, applying engine oil to the tips of the screws.
If you tighten the screws without oil, you may cause damage to the threaded areas.

④ Assemble the cam gear lining up the necessary marks per the diagram.
The crankshaft should be positioned at the top dead center.
Then the coincidence of the cam gear should be positioned below.

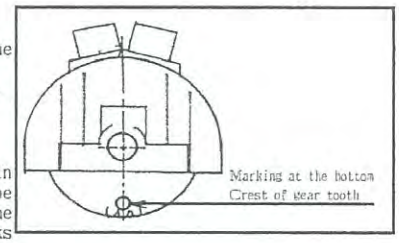

⑤ Position the piston, connecting rod, rocker arm, pins, push rod, tappet, etc., in their original positions. Engine parts are mated after running and they must be returned to their original positions. When you do assemble your engine, apply engine oil to each part and reassemble them in proper sequence while carefully checking marks and directions without applying excessive

Three principles of disassembly:
- 1) Put marks on all parts
- 2) Make sure directions are correct.
- 3) Loosen screws evenly and diagonally.

Three principles of assembly:
- 1) Keep all parts clean.
- 2) Lubricate each part with engine oil.
- 3) Fasten screws firmly and evenly and do not over tighten.

⑥ Change in mounting direction of carburetor(See figure)
1) Remove mounting cap screws so that the carburetor can be moved.
2) Turn the carburetor about 90 degrees as shown in Fig.② using the section where intake pipe is inserted into cylinder as fulcrum without removing carburetor and intake pipe.
3) Turn the carburetor in opposite direction at previous position.
4) Return carburetor to the mounting position and mount it with mounting cap screws. Careful attention is required for the tightening torque of cap screws as excessive torque results in poor movement of throttle valve.

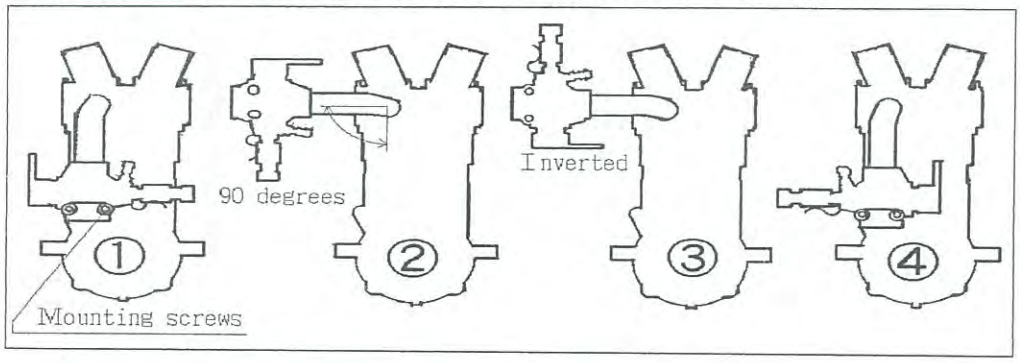

All specifications snd models are subject to change without notice.

SAITO SEISAKUSHO, CO., LTD.

22-7, 3-chome, Tokagi, Ichkawa, Chiba 272-0024, Japan

Phone 047-378-4156

Fax 047-378-4155

SAITO FA-91S, 91SGK Parts List

NO	Description	Q'ty
01A	Cylinder	1
06	Piston	1
07	Piston pin	1
08	Piston pin retainar	2
09	Piston ring	1
10C	Connecting rod	1
14	Cylinder screw set(14-1,14-2)	1set
15	Crankcase	1
17A	Rear cover	1
19	Breather nipple	1
20A	Front bearing	1
22A	Rear bearing	1
23A	Crankshaft	1
27	Taper collet & Drive flange(27-1,27-2)	1ea.
28A	Prop washer & Nut(28-1,28-2)	1ea.
31	Crankcase screw set(31-1,31-2,31-3)	1set
32A	Engine gasket set 32-1,32-2,32-3,32-4,32-5,32-6,32-7	1set
33B	Cam gear housing	1
35A	Cam gear	1
36A	Cam gear shaft	1
37	Steel washer set	1set
38	Tappet	2
39	Pushrod	2
40	Pushrod cover & Rubber seal(40-1,40-2,40-3)	2ea.
41	Rocker arm	2

NO	Description	Q'ty
42	Rocker arm screw & Nut(42-1,42-2)	2ea.
43	Rocker arm pin	2
46	Valve set(In & Ex)	1set
47	Valve spring & Keeper & Retainer(47-1,47-2,48)	2ea.
48	Valve retainer(Cotter)	2
49	Rocker arm cover	2
69	Intake manifold(Intake pipe)	1
74B	Muffler (with nipple)	1
75C	Muffler manifold set(75-1,80,151)	1set
80A	Muffler nut (To muffler)	1
82-1D	Carburetor complete	1set
83-1B	Carburetor body assembly 82-1-1A,82-1-2A,82-1-3,82-1-4,82-1-6,82-1-7 82-1-13,82-1-14,91-1	1set
85A	Full throttle needle(85A,90-1)	1
87A	Throttle barrel assembly 82-1-5,82-1-9,88B,89,90-1	1set
88B	Throttle lever(88B,90-1)	1
89	Idle needle	1
90	Carburetor screw & spring set 82-1-7,82-1-13,82-1-15,90-1	1set
91A	Carburetor gasket set 32-4,32-5,32-6,82-1-9,82-1-14,91-1	1set
110	Anti loosening nut	1
151	Muffler nut (To cylinder)	1

92	Choke valve assembly(Option)	1set

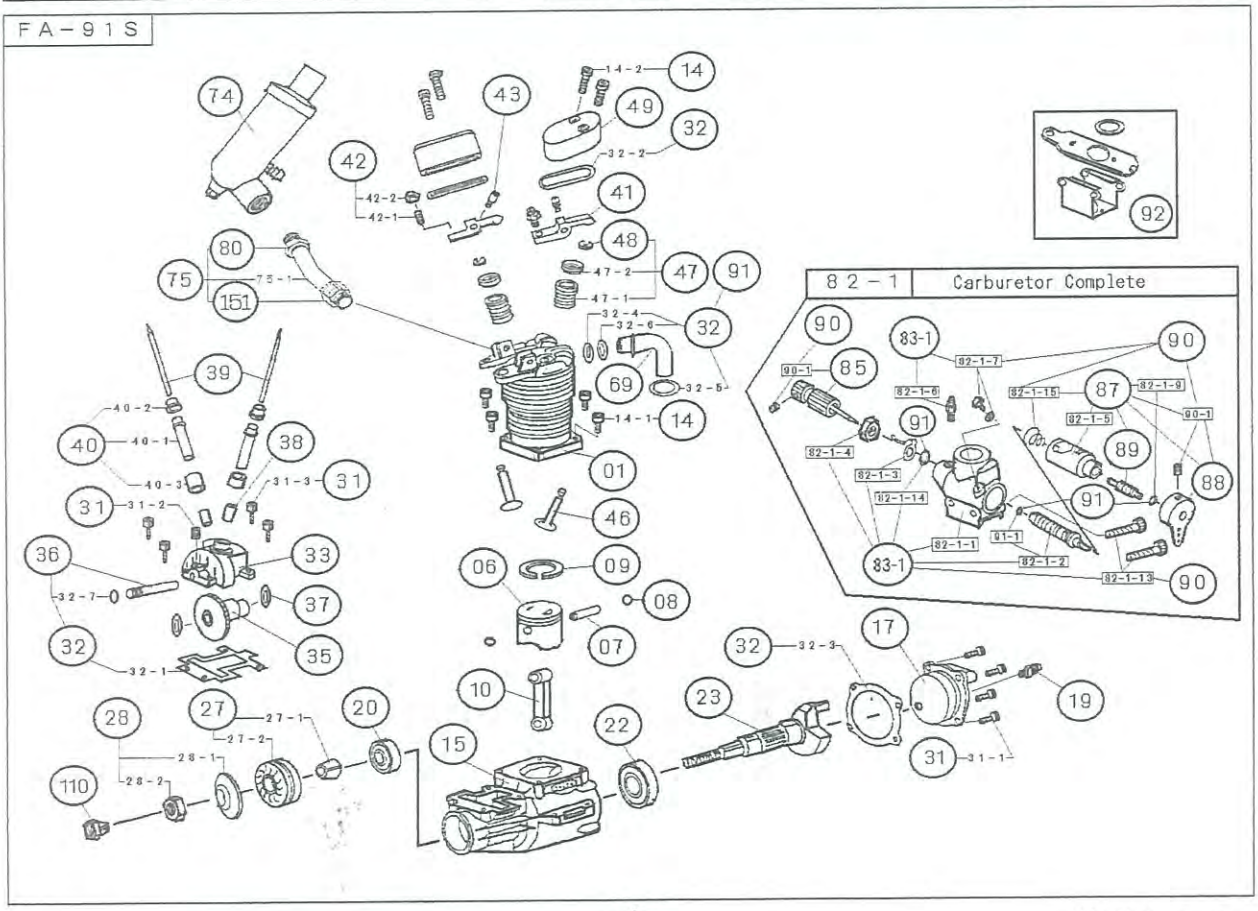

(2006, 5, 25)